SGC

5” BLOCK LIFT KIT

EZGO TXT 01.5-13, ELEC

Product is subject to change without prior notice.

INSTALLATION INSTRUCTIONS
EZGO TXT 01.5-13, ELEC

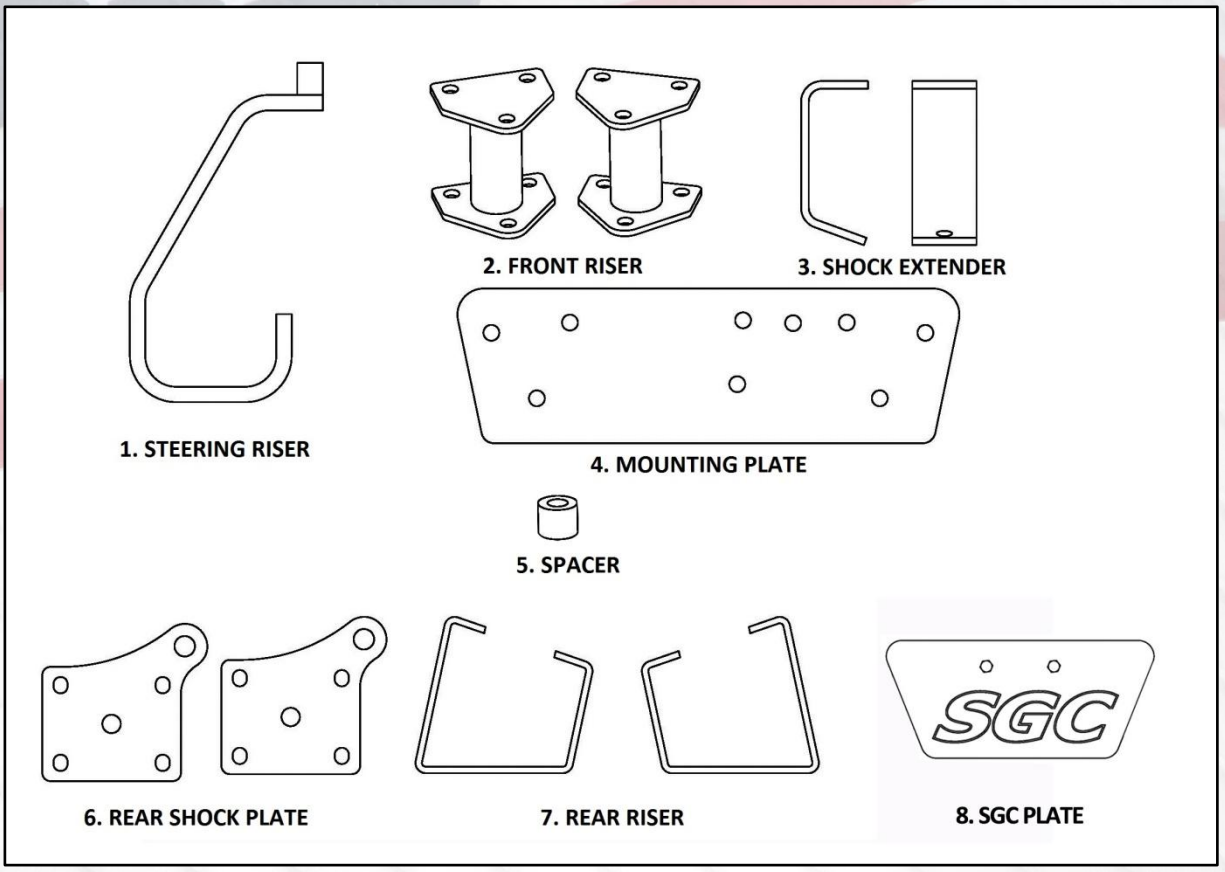

9	front shock extender	Hex Bolt	7/16*14-1 1/4	2
		Nylon Nut	7/16-14	2
		Flat washer	7/16	4
10	front axle	Hex Bolt	7/16*14-1 1/2	6
		Nylon Nut	7/16-14	6
		Flat washer	7/16	12
11	front steering riser	Hex Bolt	M12*50	2
		Nylon Nut	M12	2
12	rear riser	Hex Bolt	M10*30	8
		Nylon Nut	M10	8
13	SGC PLATE	Hex Bolt	M6*10	2

LIFT KIT INSTALLATION INSTRUCTIONS
EZGO TXT 01.5-13, ELEC

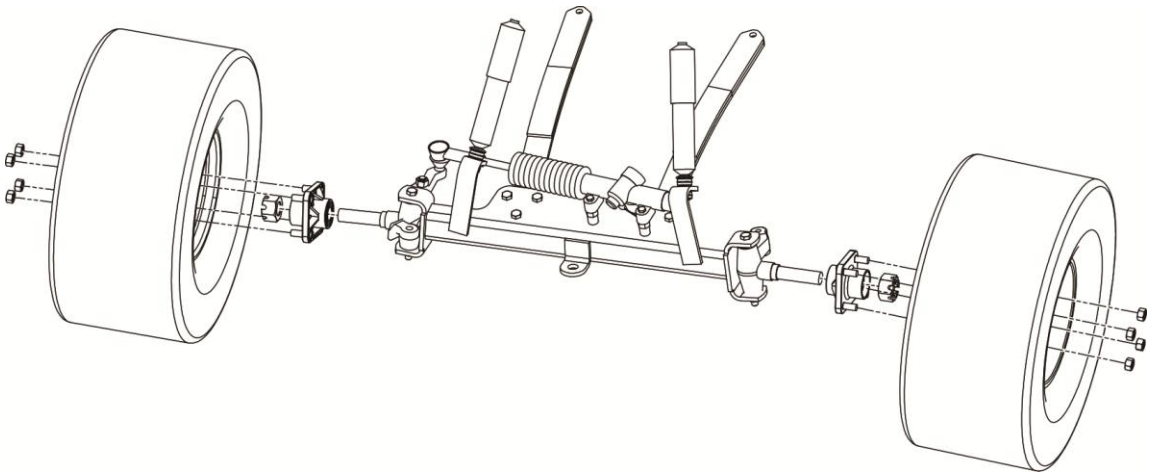

1. Engage parking brake and chock rear wheels. Raise Golf Cart with lift and use jack stands. Remove front tires, then remove cotter pin, castle nut, and hub. Retain hardware.

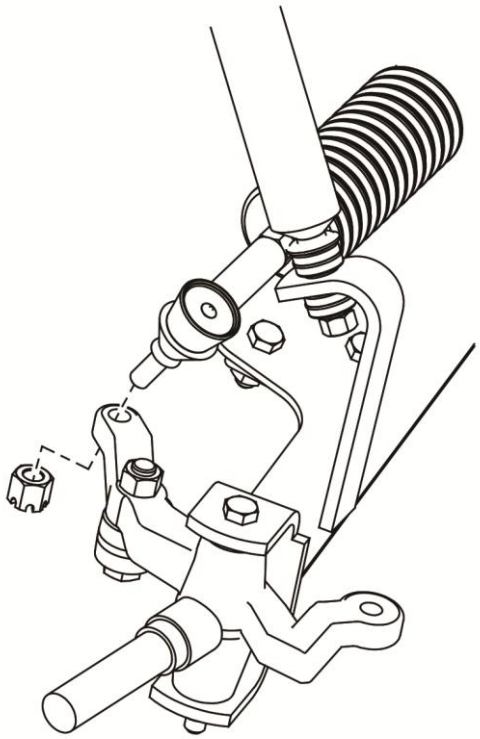

2. Remove cotter pin from castle nut. Remove castle nut from ball joint and separate ball joint from spindle. and retain.

LIFT KIT INSTALLATION INSTRUCTIONS
EZGO TXT 01.5-13, ELEC

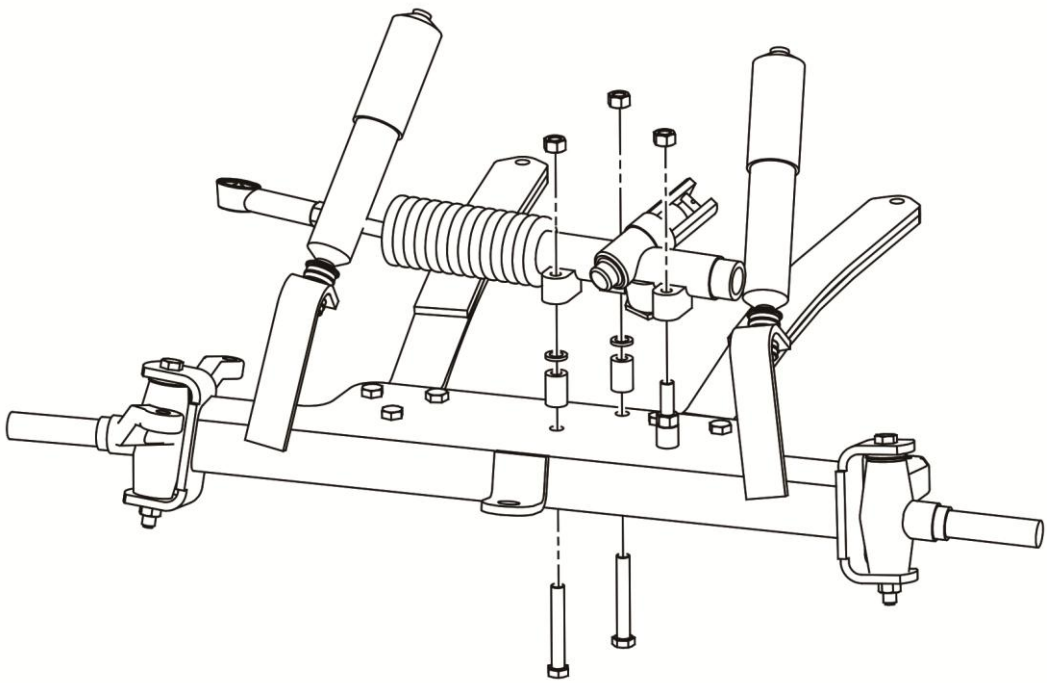

3. Remove three bolts from rack and pinion. Retain Hardware.

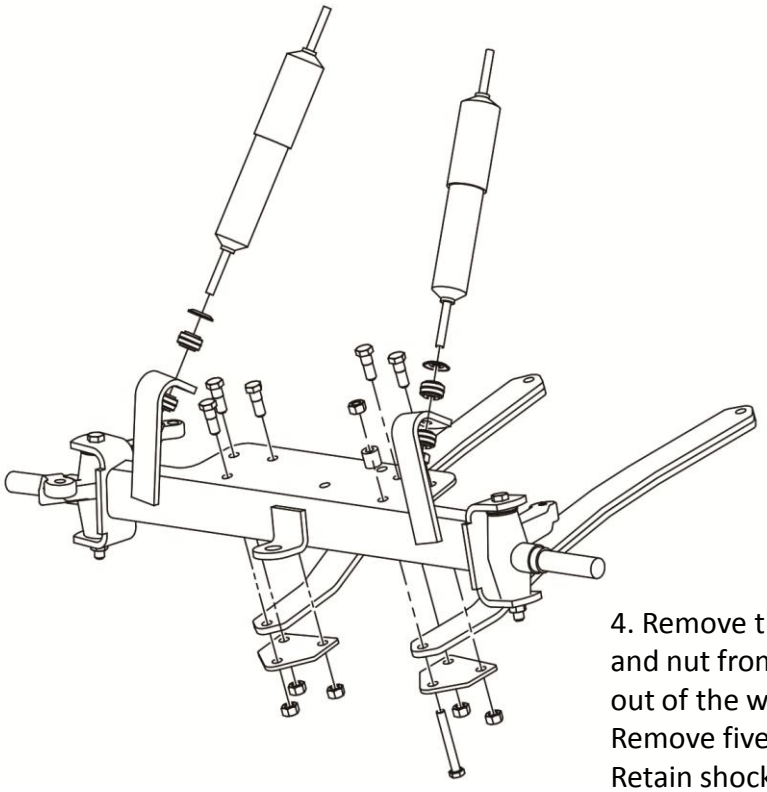

4. Remove the lower washer, bushing, and nut from shock. Push shock up and out of the way. Retain Hardware. Remove five bolts from factory axle. Retain shock plates and hardware.

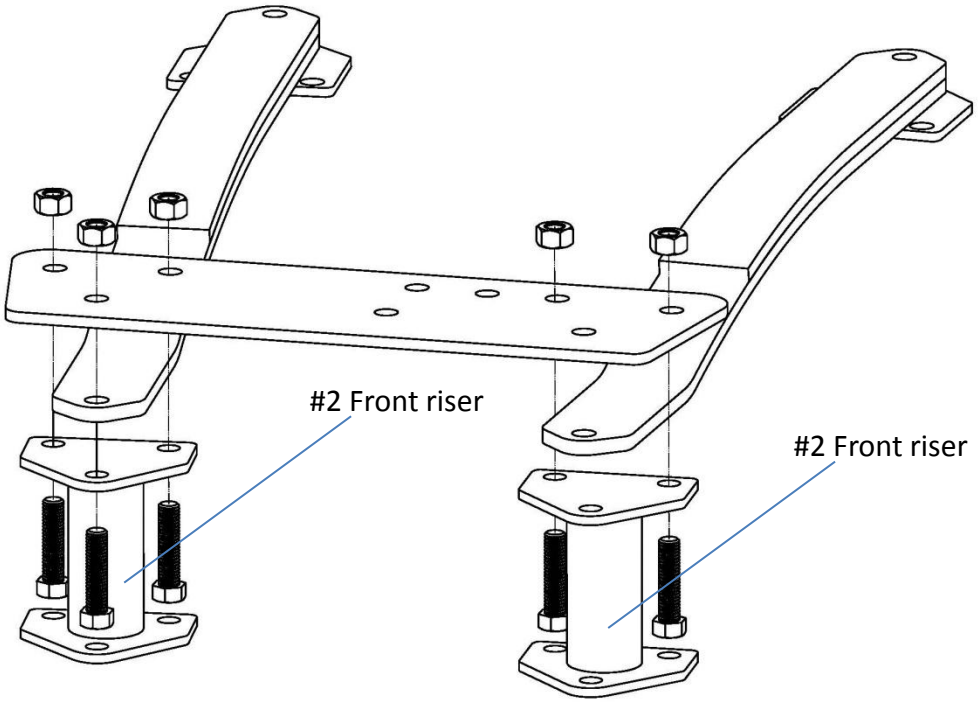

5. Position front springs above front axle. Install mounting plate, front leaf spring and front risers #2 using factory hardware. Pay attention on bolt direction. Don't tighten until step 7 finishes.

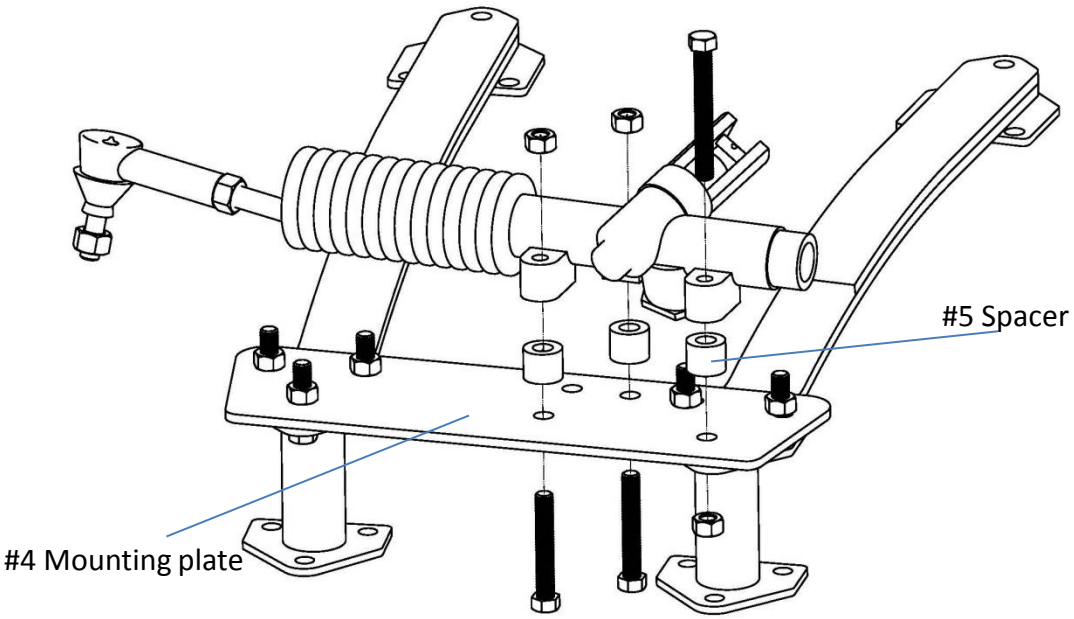

6. Mount rack and pinion on mounting plate #4 using factory hardware and spacer #5. Don't tighten until step 7 finishes.

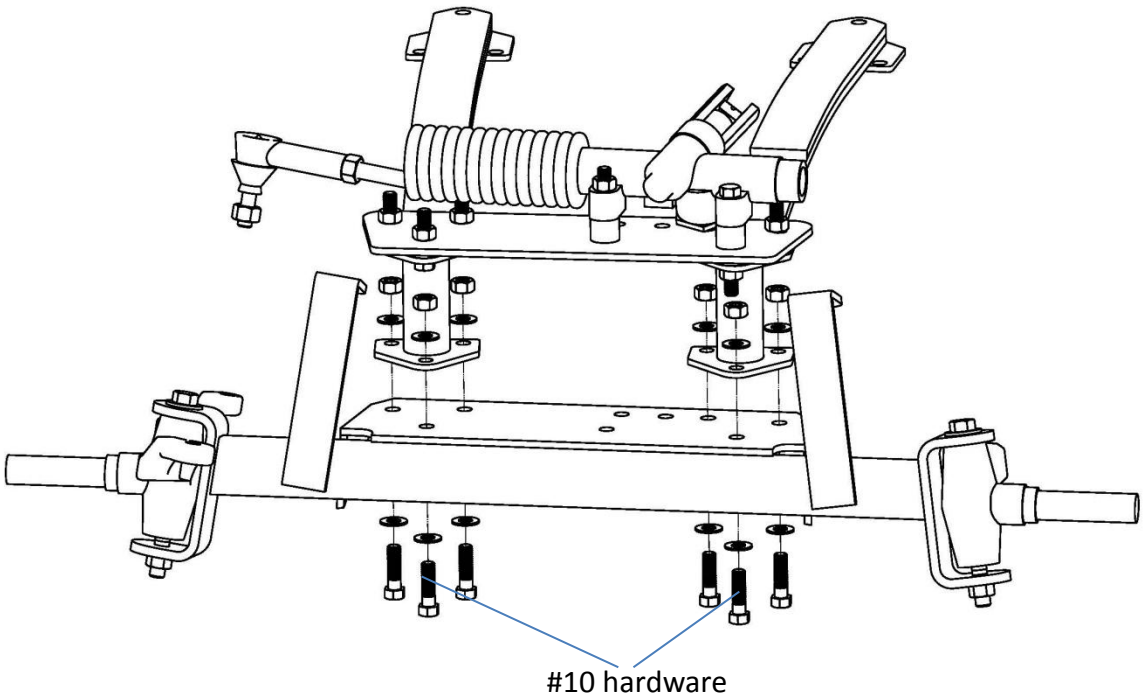

7. Install front riser and rack pinion assembly on front axle using supplied hardware #10. You may need to turn the steering wheel a bit during installation to prevent bolts from hardware #10 touching tie rod. Tighten hardware from Step 5 and 6.

8. Install shock extender #3 on drop axle using supplied hardware #9. Don't tighten yet.

Install lower end of shock to shock extender using factory hardware.

Once both sides completed, Tighten them.

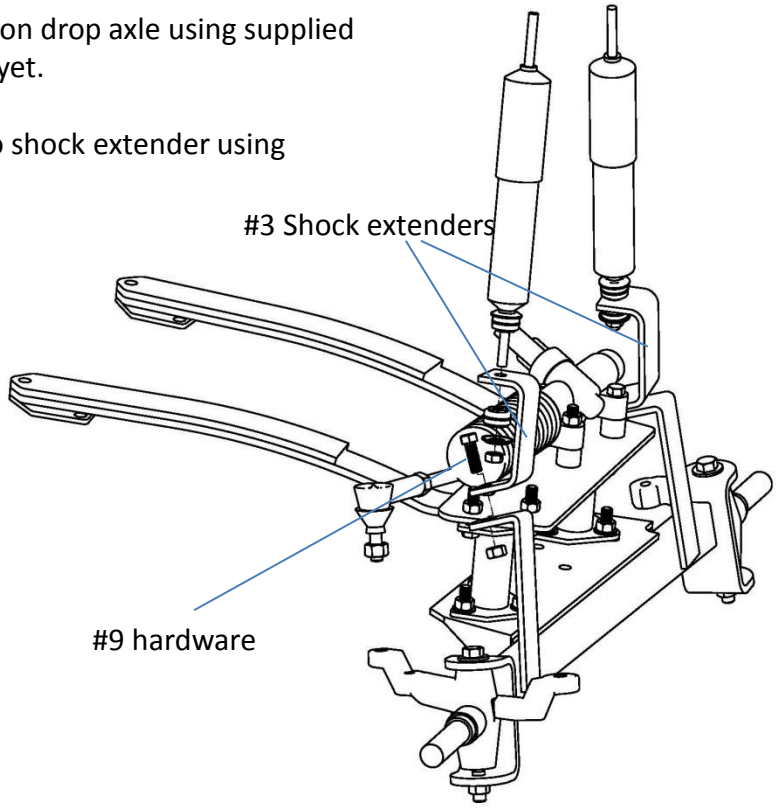

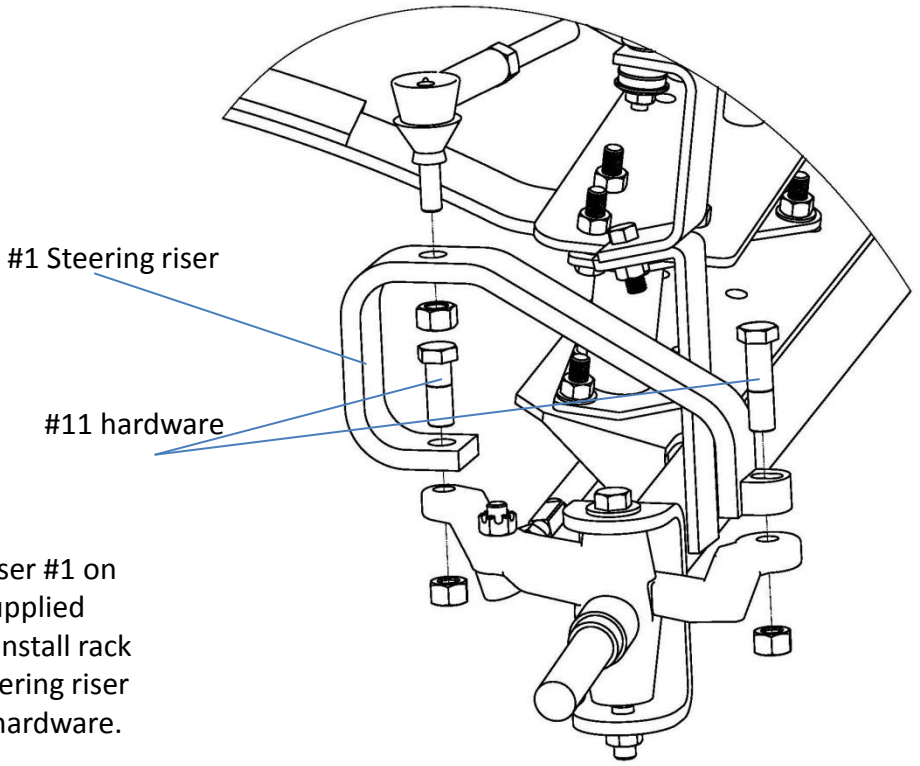

9. Install steering riser #1 on spindle using supplied hardware #11. Install rack ball joint on steering riser using retained hardware.

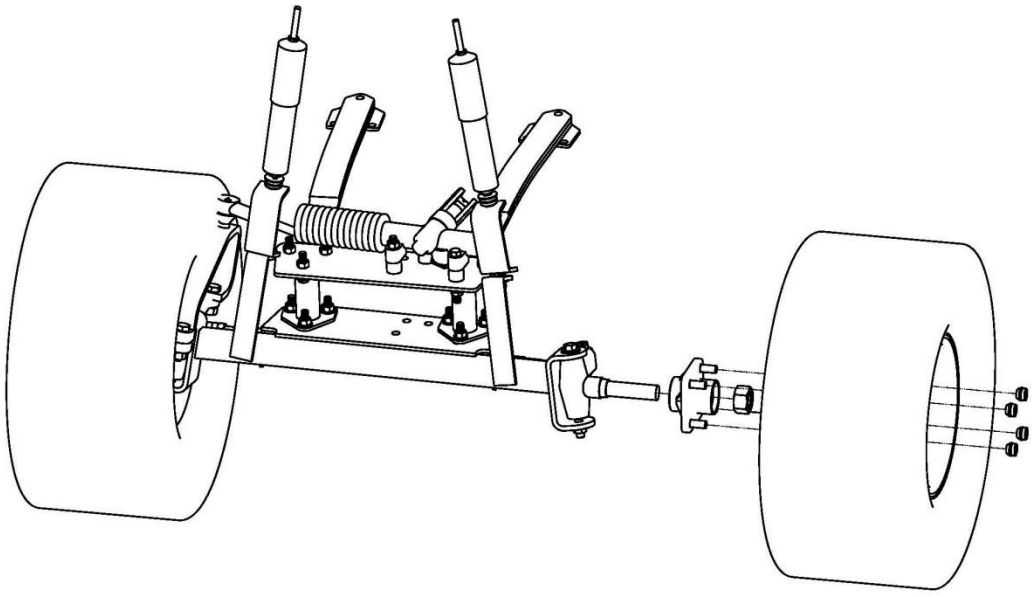

10. Reinstall hubs and front wheels.

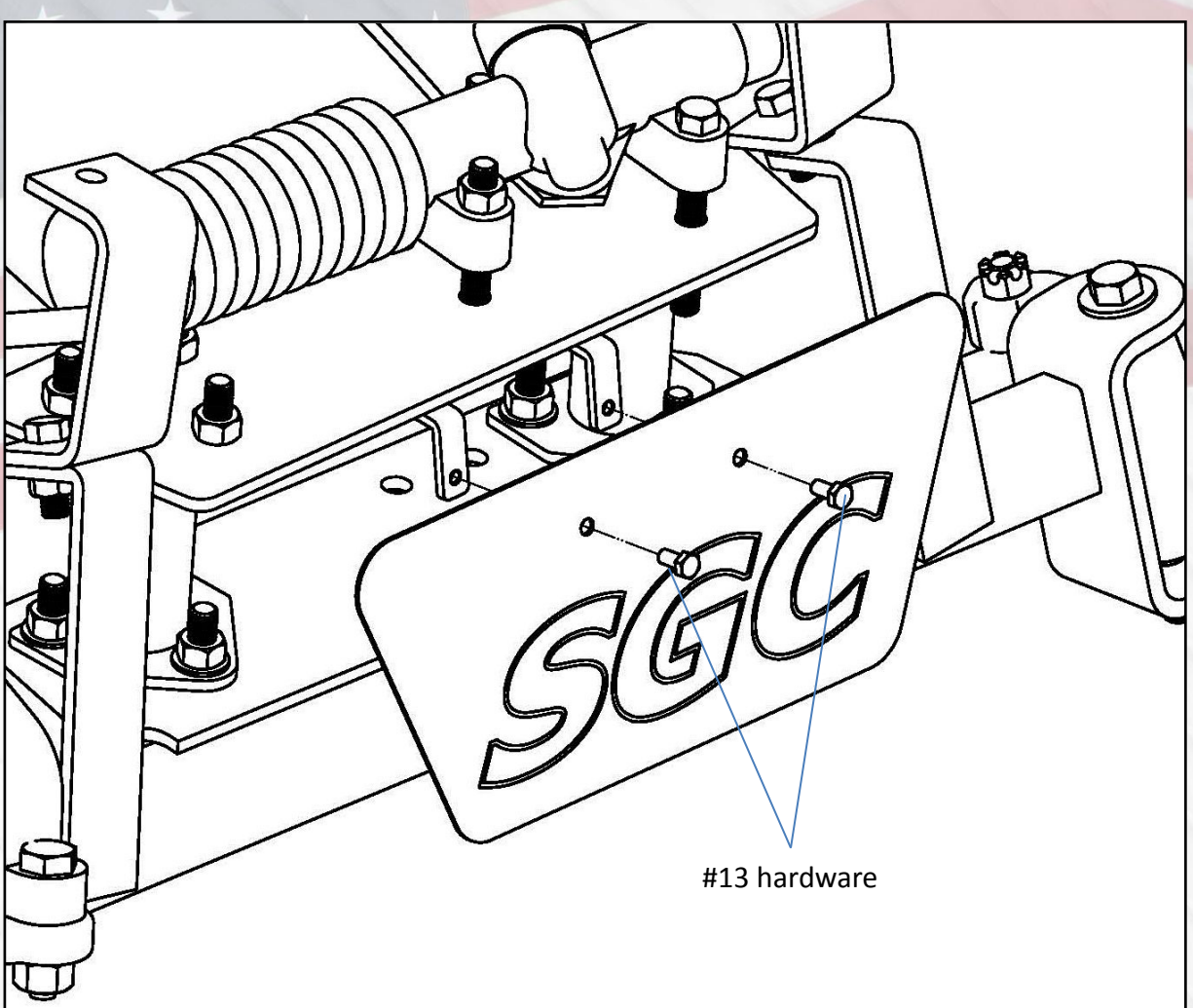

11. Install SGC plate using supplied hardware #13.

Ensure parking brake is still engaged and chock front wheels.
Use jack to support motor.

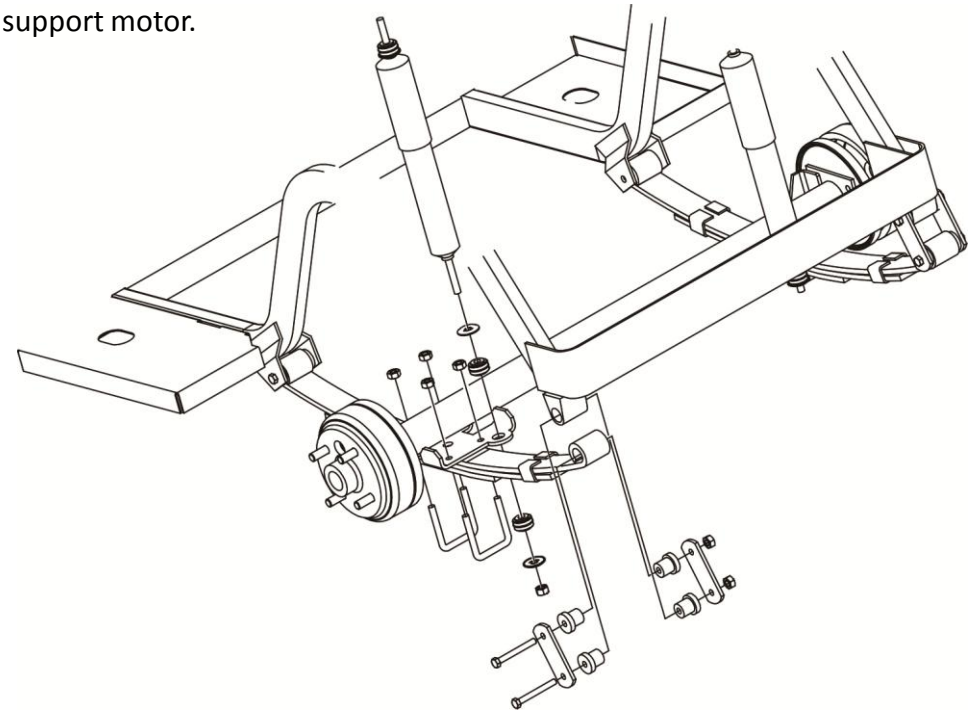

12. Unbolt the rear leaf springs from under the rear end. Save the front and rear leaf spring bolts for reinstallation of the leaf springs. Using the car jack lower the rear end of the cart.

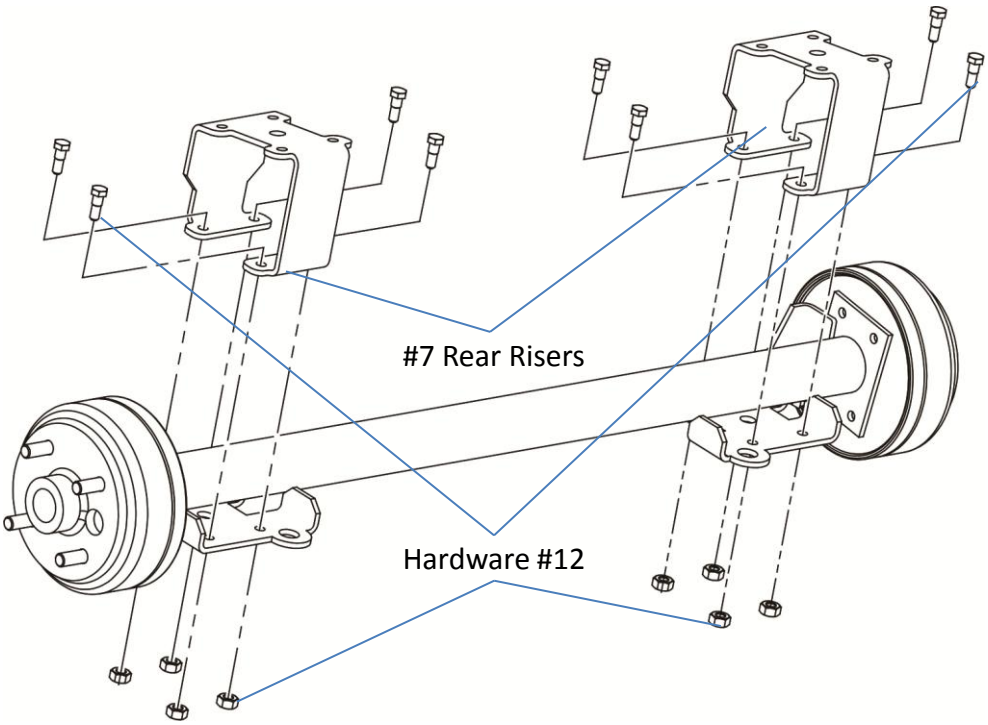

13. Install Rear Riser #7 on top of the axle using supplied hardware #12.

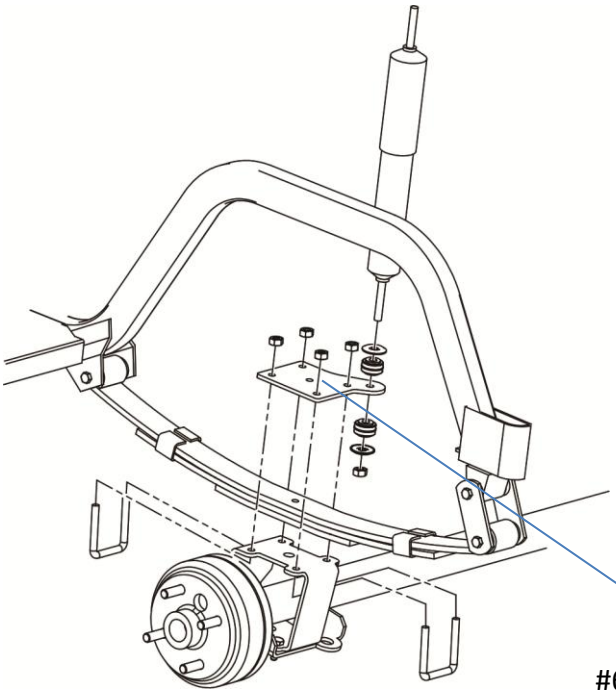

14. Place the leaf springs on top of the risers and loosely mount the front of the leaf springs to the stock front leaf spring mount using the stock hardware.

Place rear shock plates #6 on top of the leaf springs with the shock mount holes facing the rear of the car and towards the center. Using the stock U-bolts from the leaf springs mount the shock plates to the rear risers with the leaf springs sandwiched in between them. Make sure all bolts are tighten evenly.

Reattach rear shock to rear shock plate.

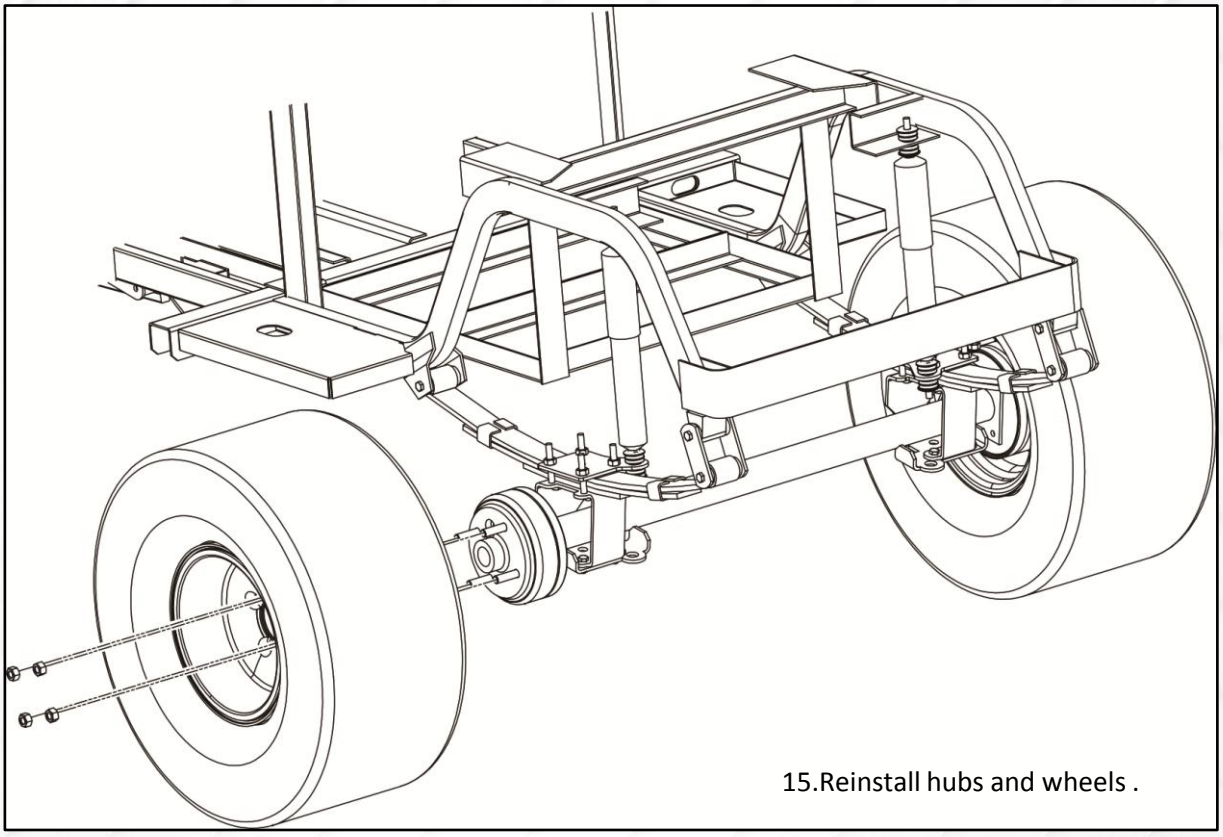

15.Reinstall hubs and wheels .

RETURN MERCHANDISE AUTHORIZATION

Dear Valued Customer,

Thank you for choosing Steeleng Golf Cart Accessories for your golf cart needs.

We apologize for the issues you are having with your purchase. We strive to offer the absolute best quality at the absolute best price.

To best serve you, we do need a little information to help process your return and/or exchange faster.

Please complete the following and include this entire form with your return.

_____
Name

_____ _____ _____
Shipped To Address STATE ZIP

Purchased with: eBay Direct Phone Order

This is for EXCHANGE REFUND

Please describe reason for return:-

_____
_____
_____
_____

Our Return Address:
Steeleng Golf Cart Accessories
3309 Laurens Road,
Greenville, SC 29607
Tele: 864-675-1103

For Office Use Only:
Received By:_____ Date_____
Refund Amount_____ Exchange Issued_____

**Steeleng Golf Cart Accessories reserves the right to charge a 15% restocking fee for all returned and/or exchanged items.